Indoor frame Nick

Model 2020

REHATEC®

☐ **Cost estimate**

Sender / billing address

☐ **Order**

Address for dispatch

Purchaser

Date

Commission

Reset **Send** **Print**

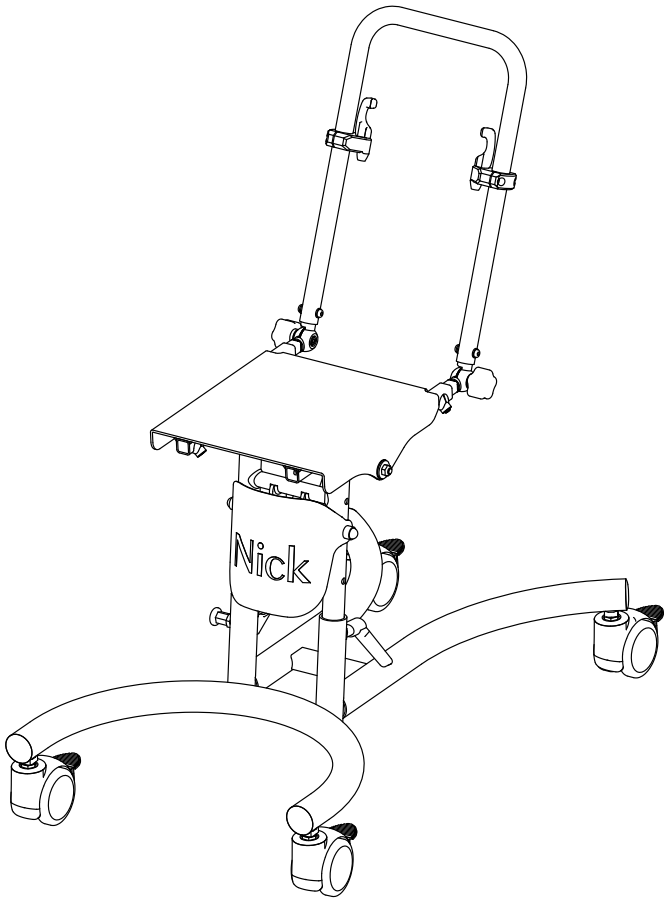

Figure does not comply with the base model and its accessories | Size tolerance of ±3%

Max. user weight

- for size 1: 60 kg
- for size 2: 60 kg
- for size 3: 90 kg

Basic equipment Nick

- Sturdy steel tube frame with coating
- Mechanical seat height adjustment
- Seat tilt via gas spring
- 4 lockable castors, 75 mm
- Seat plate for trapezoidal adapter /seat shell adapters
- Mounting for push bar
- Footplate mounting

Additional technical details available at www.rehatec.com -> Downloads. Or send us your request by email, fax or letter.

Valid from 01.01.2026 until recalled. © Unauthorized duplication without prior permission of Rehatec GmbH is strictly prohibited.
Technical changes reserved. Our general terms and conditions apply, see www.rehatec.com.
By ordering our products, you confirm that you have read and accepted our general terms and conditions

Rehatec® GmbH, In den Kreuzwiesen 35, 69250 Schönau, **T: +49 6228 9136-0**, **F: +49 6228 9136-99**, info@rehatec.com, www.rehatec.com

Measurements and Configuration

Indoor frame Nick – Model 2020

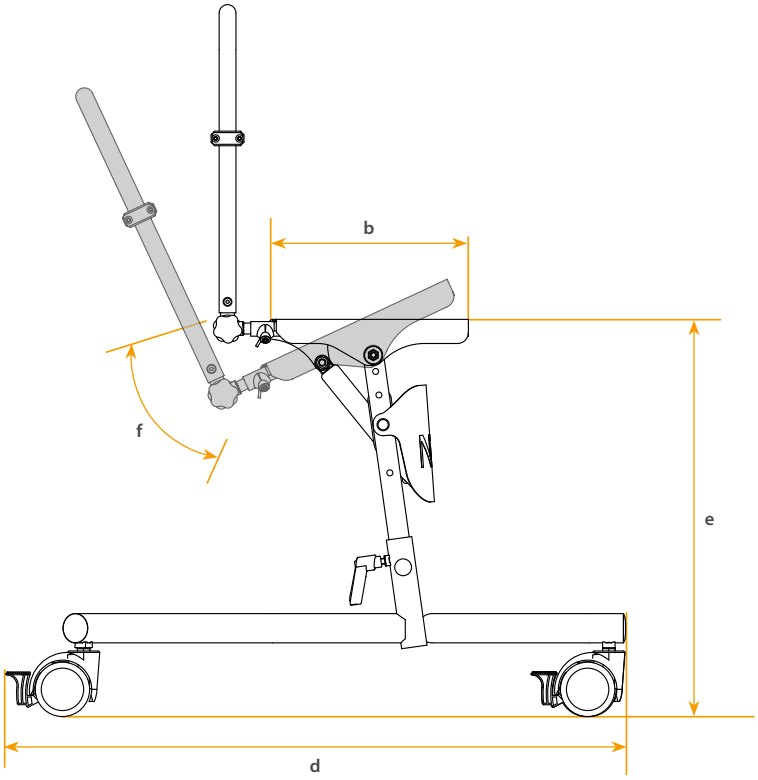

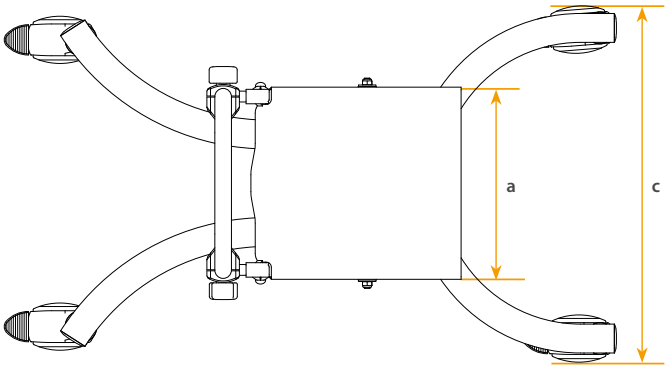

Measurements					
Size	(a×b) Seatplate	(c) Total width	(d) Total length	(e) Seat height	(f) Tilt-in space
1	26,5 × 26,5 cm	50 cm[1]	75 cm[1]	41,5 – 54 cm[1]	-5° bis 35°
2	26,5 × 26,5 cm	50 cm[1]	85 cm[1]	41,5 – 54 cm[1]	
3	30,5 × 32,5 cm	67 cm[2]	94 cm[2]	41,5 – 54 cm[1]	

[1] incl. 75 mm castors | [2] incl. 100 mm castors

Additional technical details available at www.rehatec.com -> Downloads. Or send us your request by email, fax or letter.

Valid from 01.01.2026 until recalled. © Unauthorized duplication without prior permission of Rehatec GmbH is strictly prohibited.
Technical changes reserved. Our general terms and conditions apply, see www.rehatec.com.
By ordering our products, you confirm that you have read and accepted our general terms and conditions
Rehatec® GmbH, In den Kreuzwiesen 35, 69250 Schönau, **T: +49 6228 9136-0**, **F: +49 6228 9136-99**, info@rehatec.com, www.rehatec.com

Frame

Indoor frame Nick – Model 2020

REHATEC®

Nick Indoor frame

Seat tilt
via gas spring
Height adjustment:
mechanical

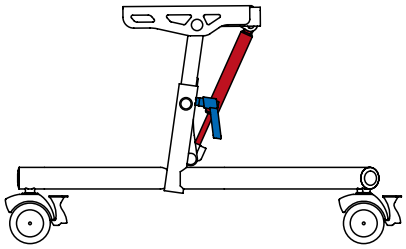

Code	For size
1021899	1
1021900	2
1021901	3

☐ **Size 1** 878, – € ☐ **Size 2** 891, – € ☐ **Size 3** 908, – €

Patient

Weight	Body height
kg	cm

Seat tilt Nick 2020

-5° bis 35°

Patient's muscle tone

☐ **Stereotypic movements**
(e.g. permanent body rocking)*

*** Please check whether any customisations, such as reinforcements of the base frame, are required due to stereotypical behaviour! Requirements can be specified under "Notes" on the last page!**

Frame colours

☐	Pure white	(RAL 9010)	☐	Pearl night blue, matt	(RAL 5026)
☐	Daffodil yellow	(RAL 1007)	☐	Water blue	(RAL 5021)
☐	Luminous yellow	(RAL 1026)	☐	Light green	(RAL 6027)
☐	Pure orange	(RAL 2004)	☐	Yellow green	(RAL 6018)
☐	Luminous orange	(RAL 2005)	☐	Pearl green, matt	(RAL 6035)
☐	Ruby red	(RAL 3003)	☐	Luminous green	(RAL 6038)
☐	Pearl ruby red, matt	(RAL 3032)	☐	Anthracite grey, matt	(RAL 7016m)
☐	Heather violet	(RAL 4003)	☐	Metallic silver*	
☐	Claret violet	(RAL 4004)	☐	Metallic anthracite*	
☐	Ultramarine blue	(RAL 5002)	☐	Graphite black, matt	(RAL 9011m)
☐	Metallic traffic blue*		☐	Glossy jet black	(RAL 9005g)

*** no RAL colours**

This is only an overview of colours. Find all details at www.rehatec.com.

Personalisation

Sticker with custom text
Code 5185

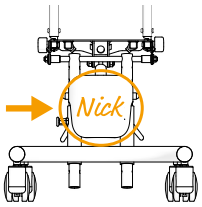

Custom text:

☐ **Optional (free of charge)**

Castors

	Lockable castors, 75 mm	Lockable castors, 100 mm	Lockable castors, 125 mm
	Code 1005593	Code 1022143 **Caution:** Seat height increases by 4.5 cm	Code 1014946 **Caution:** Seat height increases by 7 cm
Nick size	**Set / inclusive**	**Set / extra charge 109, – €**	**Set / extra charge 109, – €**
1	☐	☐	☐
2	☐	☐	☐
3	—	☐ (standard / incl.)	☐

Frame

Wall and furniture bumpers

The total width extends by 4 cm!

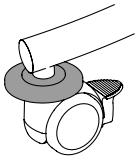

Code	Castors
1018607	75 mm
1022293	100 mm
1018698	125 mm

☐ **Set** 125, – €

Seat shell adapter

Trapezoidal adapter, lower part

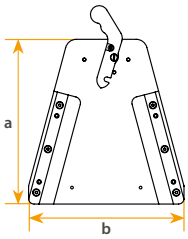

Code	For size	a	b
1011358	1 / 2	24 cm	25 cm
1011356	3	30 cm	28 cm

☐ **Extra charge** 230, – €

Trapezoidal adapter, complete

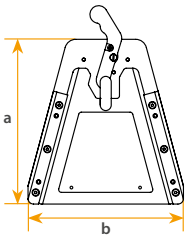

Code	For size	a	b
1008603	1 / 2	24 cm	25 cm
1008589	3	30 cm	28 cm

☐ **Set** 438, – €

Additional technical details available at www.rehatec.com -> Downloads. Or send us your request by email, fax or letter.
Valid from 01.01.2026 until recalled. © Unauthorized duplication without prior permission of Rehatec GmbH is strictly prohibited.
Technical changes reserved. Our general terms and conditions apply, see www.rehatec.com.
By ordering our products, you confirm that you have read and accepted our general terms and conditions
Rehatec® GmbH, In den Kreuzwiesen 35, 69250 Schönau, **T: +49 6228 9136-0**, **F: +49 6228 9136-99**, info@rehatec.com, www.rehatec.com

Back, Footplate and Accessories

Indoor frame Nick – Model 2020

REHATEC®

Please select a push bar or backrest.

Push bar

Push bar mounted on the seat plate, angle adjustable

Angle adjustable, push bar that clicks into place to adjust the angle
Colour: **eloxal silver**

Not to be combined with back mounting system for seat shells!

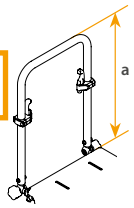

For size	Code	a
1 / 2	1021790	43,5 cm
3	1021791	41,5 cm

☐ **Extra charge** **270, – €**

Back

Back with push bar mounted on the seat plate

Back and push bar that click into place to adjust the angle
Colour: **eloxal silver push bar, black extension tube**

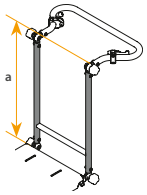

For size	Code	a
1 / 2	1021753	51,5 cm
3	1021822	49,5 cm

☐ **Extra charge** **592, – €**

Back without push bar mounted on the seat plate

Angle ajustable Back that clicks into place to adjust the angle
Colour: **eloxal silver push bar, black extension tube**

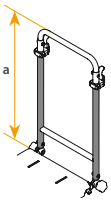

For size	Code	a
1 / 2	1021809	53,5 cm
3	1021823	51,5 cm

☐ **Extra charge** **261, – €**

Fastening system for the back, fixed bracket

Only in combination with a back!

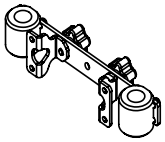

For size	Code
1 / 2	1021800
3	1016393

☐ **Set** **290, – €**

Fastening system for the back, adjustable bracket

Only in combination with a back!

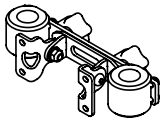

For size	Code
1 / 2	1022022
3	1022023

☐ **Set** **327, – €**

Footplates

Continuous footplate

Adjustable knee angle and fixed foot angle

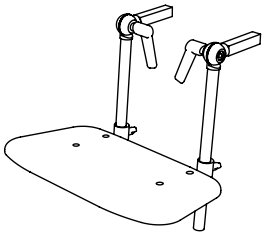

Code	For size
1010308	1+2
1009600	3

☐ **Wood** **329, – €**
☐ **Metal / standard** **329, – €**

Footplate, parted

Adjustable knee angle and fixed foot angle

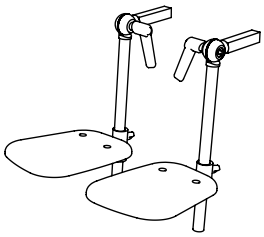

Code	For size
1010309	1+2
1010700	3

☐ **Wood** **456, – €**
☐ **Metal / standard** **456, – €**

Footplate accessories

Adjustable foot angle

Code 1017018

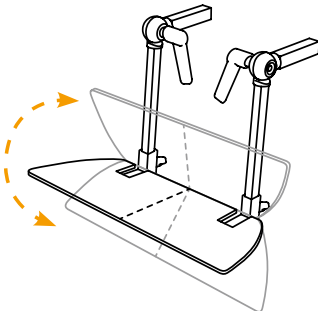

Not to be combined with folding machanism

☐ **Extra charge** **121, – €**

Folding mechanism -22° up to 90°

Code 1021152

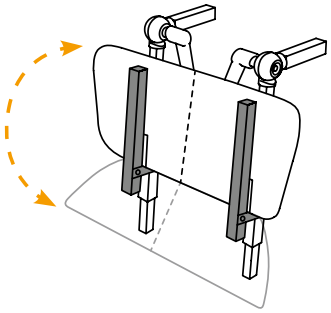

Not to be combined with adjustable foot angle and footplate, parted with multi-adjustable

☐ **Extra charge** **189, – €**

Additional technical details available at www.rehatec.com -> Downloads. Or send us your request by email, fax or letter.

Valid from 01.01.2026 until recalled. © Unauthorized duplication without prior permission of Rehatec GmbH is strictly prohibited.
Technical changes reserved. Our general terms and conditions apply, see www.rehatec.com.
By ordering our products, you confirm that you have read and accepted our general terms and conditions
Rehatec® GmbH, In den Kreuzwiesen 35, 69250 Schönau, **T: +49 6228 9136-0**, **F: +49 6228 9136-99**, info@rehatec.com, www.rehatec.com

Footplate accessories and pad

Indoor frame Nick – Model 2020

REHATEC®

Footplate accessories

Heel loop

Not to be combined with parted wooden footplates!

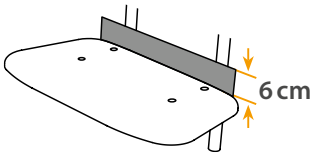

	Code	Footplate
☐	217-1	for continuous footplate
☐	217-2	for parted footplate

Piece/Pair **121, – €**

Sandals incl. foot straps

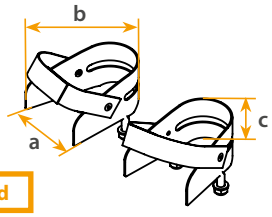

Not to be combined with footplate pad

	Size	Code	a	b	c
☐	0	1014598	9,5 cm	10,5 cm	5 cm
☐	1	1014599	10,5 cm	13,5 cm	7 cm

Pair **322, – €**

Footplate pad

Footplate pad, continuous

2 cm thick
black faux leather

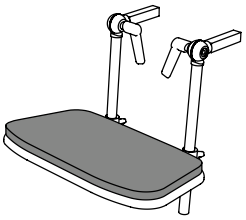

	Code	For size
☐	1017849	1+2
☐	1017855	3

Each **123, – €**

Footplate pad, parted

2 cm thick
black faux leather

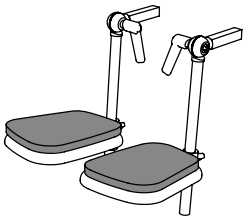

	Code	For size
☐	1017920	1+2
☐	1017921	3

Pair **175, – €**

Calf support, continuous

Cover: black faux leather

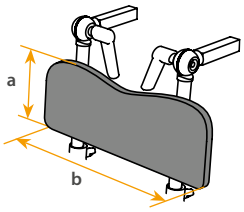

	Code	For size	a	b
☐	1010280	1+2	11 cm	30 cm
☐	1010705	3	13 cm	33 cm

Each **205, – €**

Calf support, parted

Cover: black faux leather

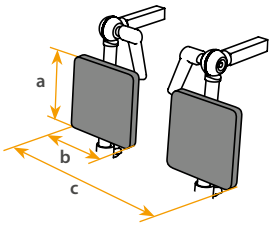

	Code	For size	a	b	c
☐	1010837	1+2	11 cm	15 cm	31 cm
☐	1010314	3	16 cm	18 cm	37,5 cm

Pair **256, – €**

For any customisations, please use the `Modifications/Customisations´ form sheet available at www.rehatec.com under `Downloads´.

Please consider that the prices of spare parts might differ from the prices specified in this order form.

Additional technical details available at www.rehatec.com -> Downloads. Or send us your request by email, fax or letter.
Valid from 01.01.2026 until recalled. © Unauthorized duplication without prior permission of Rehatec GmbH is strictly prohibited.
Technical changes reserved. Our general terms and conditions apply, see www.rehatec.com.
By ordering our products, you confirm that you have read and accepted our general terms and conditions
Rehatec® GmbH, In den Kreuzwiesen 35, 69250 Schönau, **T: +49 6228 9136-0**, **F: +49 6228 9136-99**, info@rehatec.com, www.rehatec.com